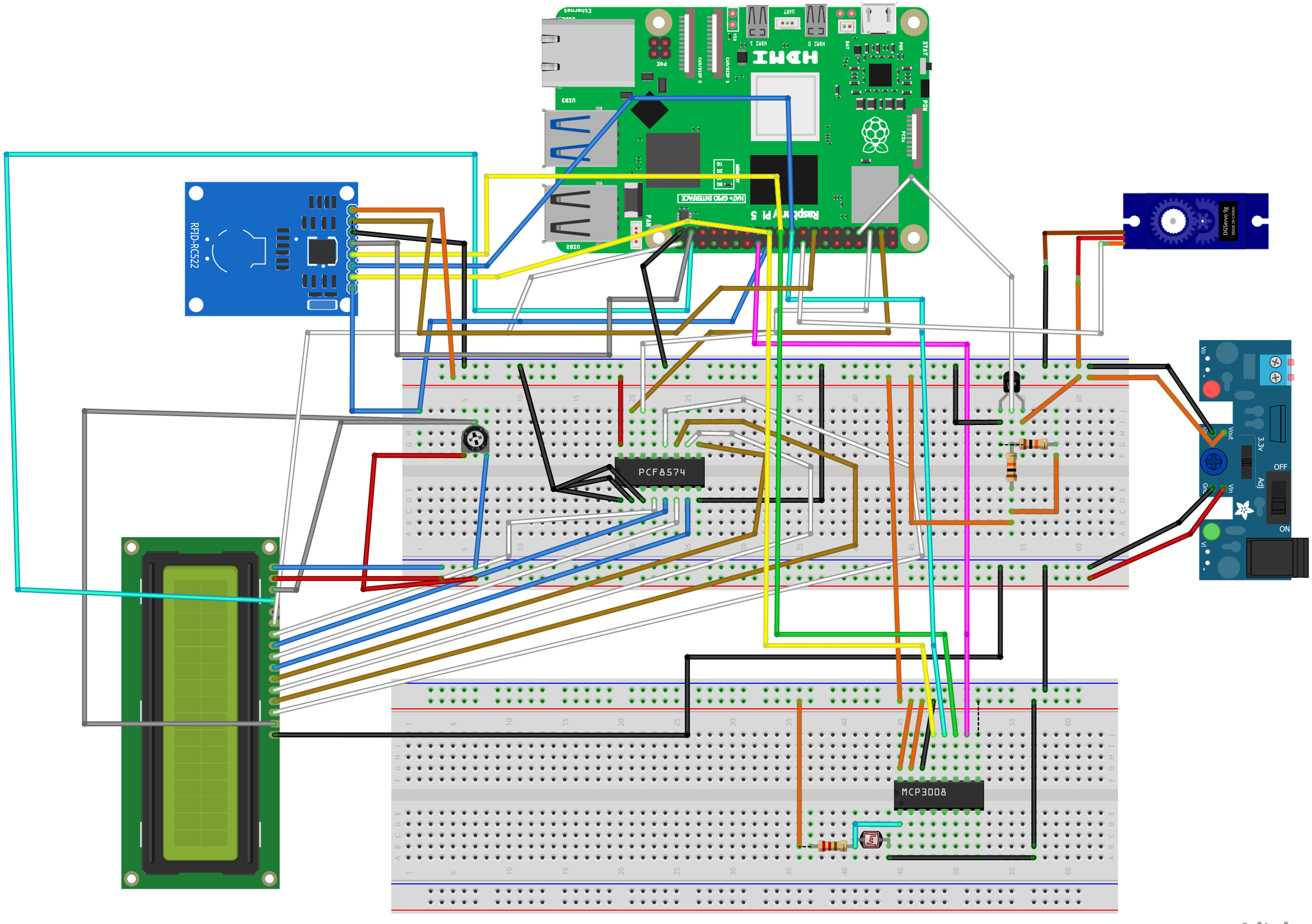
RFID-RC522
PCF8574
MCP3008
DGServo 9g
MADE IN CHINA
Vout
3.3v
Adj
OFF
ON
Vin
GND
HDMI
USB3
USB2
Raspberry Pi 5
HAT+ GPIO INTERFACE
fritzing